Silicon N-Channel Power MOSFET

CS13N50 A0R

General Description:

CS13N50 A0R, the silicon N-channel Enhanced VDMOSFETs, is obtained by the self-aligned planar Technology which reduce the conduction loss, improve switching performance and enhance the avalanche energy. The transistor can be used in various power switching circuit for system miniaturization and higher efficiency. The package form is TO-263, which accords with the RoHS standard.

V_{DSS}	500	V
I_D	13	A
$P_D(T_C=25℃)$	150	W
$R_{DS(ON)Typ}$	0.4	Ω

TO-263

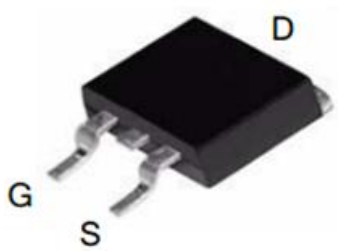

Inner Equivalent Principium Chart

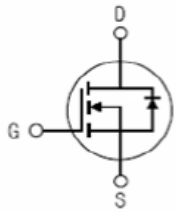

Features:

- **Fast Switching**
- **Low ON Resistance(Rdson≤0.5Ω)**
- **Low Gate Charge (Typical Data:40nC)**
- **Low Reverse transfer capacitances(Typical:11pF)**
- **100% Single Pulse avalanche energy Test**

Applications:

Power switch circuit of adaptor and charger.

Absolute（T_J= 25℃ unless otherwise specified）:

Symbol	Parameter	Rating	Units
V_{DSS}	Drain-to-Source Voltage	500	V
I_D	Continuous Drain Current T_C = 25°C	13	A
	Continuous Drain Current T_C = 100 °C	8.2	A
I_{DM} [a1]	Pulsed Drain Current T_C = 25°C	52	A
V_{GS}	Gate-to-Source Voltage	±30	V
E_{AS} [a2]	Single Pulse Avalanche Energy	840	mJ
dv/dt [a3]	Peak Diode Recovery dv/dt	5.0	V/ns
P_D	Power Dissipation T_C = 25°C	150	W
	Derating Factor above 25°C	1.2	W/℃
T_J，T_{stg}	Operating Junction and Storage Temperature Range	150，–55 to 150	℃

Electrical Characteristics（TJ= 25℃ unless otherwise specified）:

OFF Characteristics						
Symbol	Parameter	Test Conditions	Rating			Units
			Min.	Typ.	Max.	
V_{DSS}	Drain to Source Breakdown Voltage	V_{GS}=0V, I_D=250μA	500	--	--	V
$\Delta BV_{DSS}/\Delta T_J$	Bvdss Temperature Coefficient	ID=250uA,Reference25℃	--	0.6	--	V/℃
I_{DSS}	Drain to Source Leakage Current	V_{DS} =500V, V_{GS}= 0V, T_J = 25℃	--	--	1	μA
		V_{DS} =400V, V_{GS}= 0V, T_J = 125℃	--	--	100	μA
$I_{GSS(F)}$	Gate to Source Forward Leakage	V_{GS} =+30V	--	--	100	nA
$I_{GSS(R)}$	Gate to Source Reverse Leakage	V_{GS} =-30V	--	--	-100	nA

ON Characteristics						
Symbol	Parameter	Test Conditions	Rating			Units
			Min.	Typ.	Max.	
$R_{DS(ON)}$	Drain-to-Source On-Resistance	V_{GS}=10V,I_D=6.5A	--	0.4	0.5	Ω
$V_{GS(TH)}$	Gate Threshold Voltage	V_{DS} = V_{GS}, I_D = 250μA	2.0	--	4.0	V
Pulse width tp≤300μs, δ ≤2%						

Dynamic Characteristics						
Symbol	Parameter	Test Conditions	Rating			Units
			Min.	Typ.	Max.	
g_{fs}	Forward Transconductance	V_{DS}=15V, I_D =6.5A	--	13	--	S
C_{iss}	Input Capacitance	V_{GS} = 0V V_{DS} = 25V f = 1.0MHz	--	1957	--	pF
C_{oss}	Output Capacitance		--	195	--	
C_{rss}	Reverse Transfer Capacitance		--	11	--	

Resistive Switching Characteristics						
Symbol	Parameter	Test Conditions	Rating			Units
			Min.	Typ.	Max.	
$t_{d(ON)}$	Turn-on Delay Time	I_D =13A V_{DD} = 250V R_G =10Ω	--	28	--	ns
tr	Rise Time		--	21	--	
$t_{d(OFF)}$	Turn-Off Delay Time		--	62	--	
t_f	Fall Time		--	32	--	
Q_g	Total Gate Charge	I_D =13A V_{DD} =400V V_{GS} = 10V	--	40	--	nC
Q_{gs}	Gate to Source Charge		--	9.2	--	
Q_{gd}	Gate to Drain (“Miller”)Charge		--	14	--	

Source-Drain Diode Characteristics						
Symbol	Parameter	Test Conditions	Rating			Units
			Min.	Typ.	Max.	
I_S	Continuous Source Current (Body Diode)	T_C = 25°C	--	--	13	A
I_{SM}	Maximum Pulsed Current (Body Diode)		--	--	52	A
V_{SD}	Diode Forward Voltage	I_S=13A,V_{GS}=0V	--	--	1.5	V
trr	Reverse Recovery Time	I_S=13A,T_j = 25℃ dI_F/dt=100A/us, V_{GS}=0V	--	555	--	ns
Qrr	Reverse Recovery Charge		--	4550	--	nC
I_{RRM}	Reverse Recovery Current		--	16.4	--	A
Pulse width tp≤300μs, δ ≤2%						

Symbol	Parameter	Max.	Units
$R_{\theta JC}$	Junction-to-Case	0.83	℃/W
$R_{\theta JA}$	Junction-to-Ambient	62.5	℃/W

[a1]: Repetitive rating; pulse width limited by maximum junction temperature
[a2]: L=10mH, I_D=13A, Start T_J=25℃
[a3]: I_{SD} =13A,di/dt ≤100A/us,V_{DD}≤$BV_{DS,}$ Start T_J=25℃
[a4]: Recommend soldering temperature defined by IPC/JEDEC J-STD 020

Characteristics Curve:

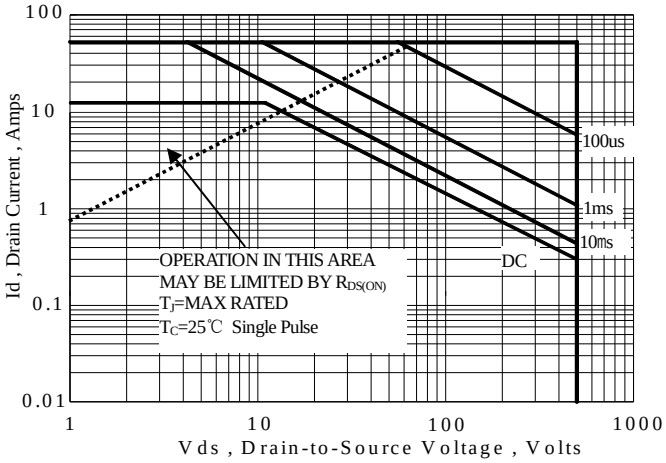

Figure 1 Maximum Forward Bias Safe Operating Area

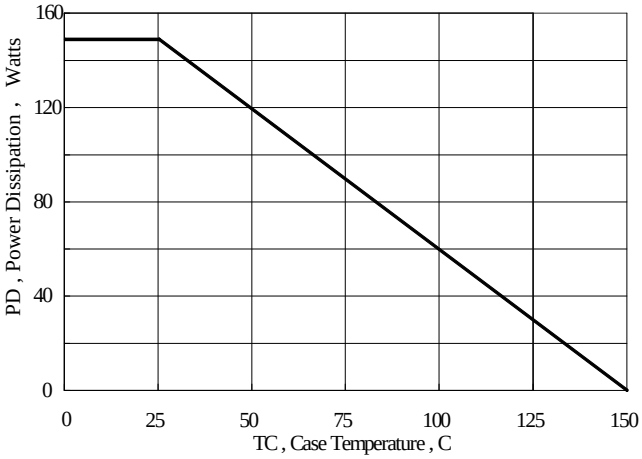

Figure 2 Maximum Power Dissipation vs Case Temperature

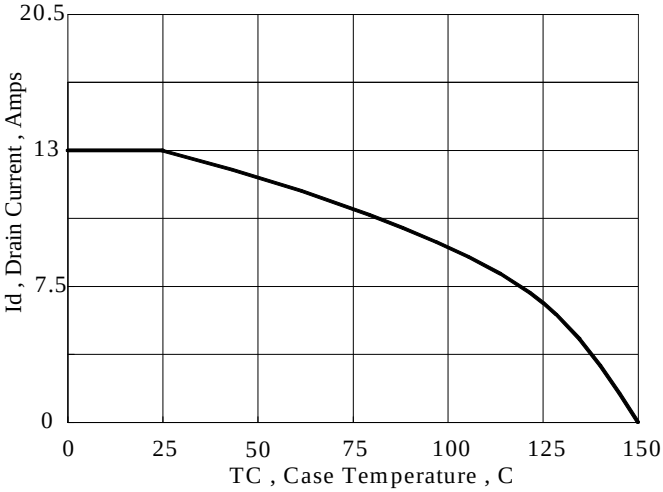

Figure 3 Maximum Continuous Drain Current vs Case Temperature

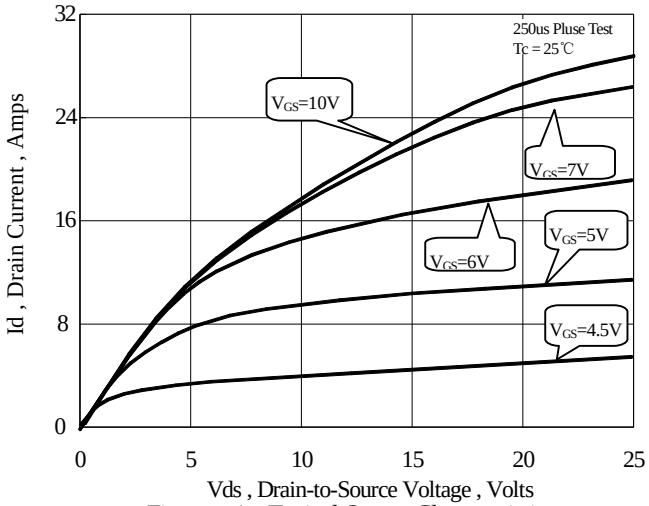

Figure 4 Typical Output Characteristics

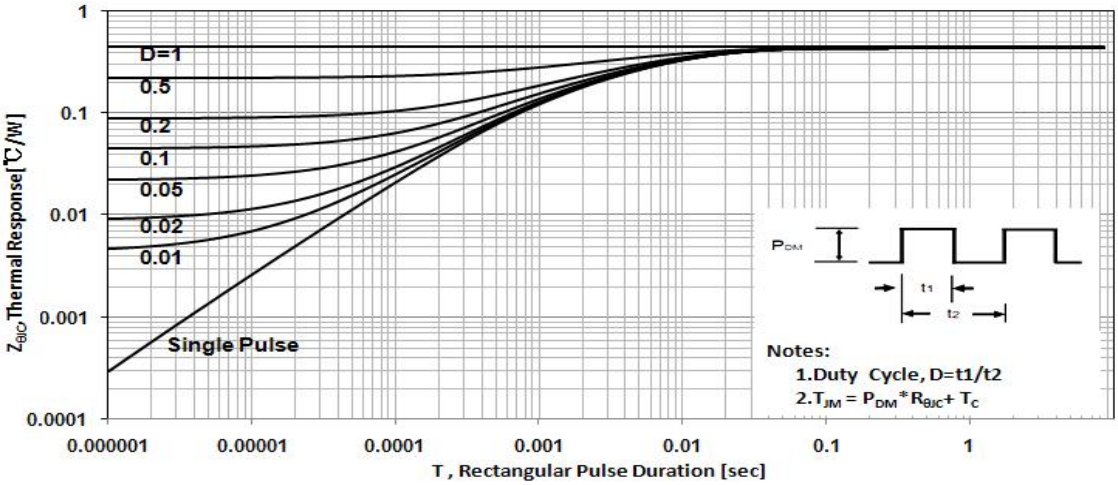

Figure 5 Maximum Effective Thermal Impendance , Junction to Case

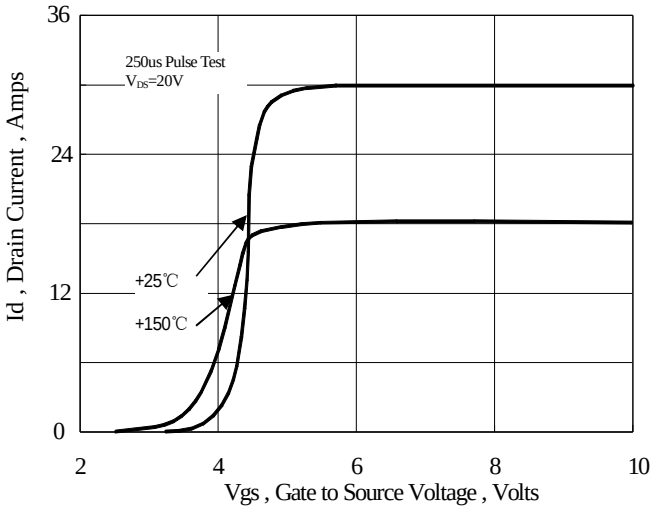

Figure 6 Typical Transfer Characteristics

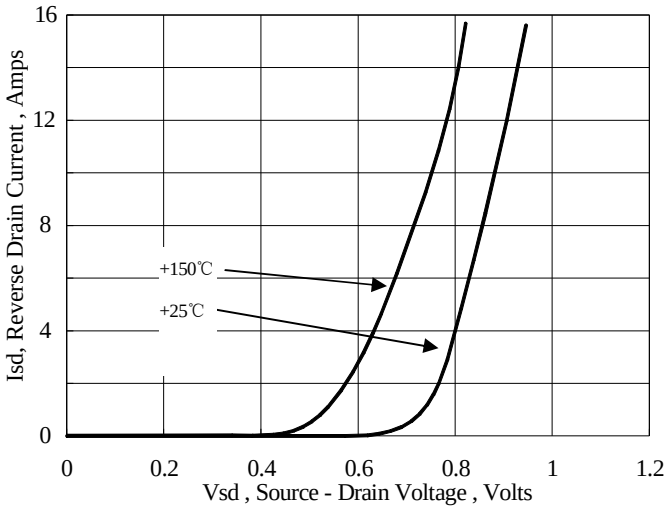

Figure 7 Typical Body Diode Transfer Characteristics

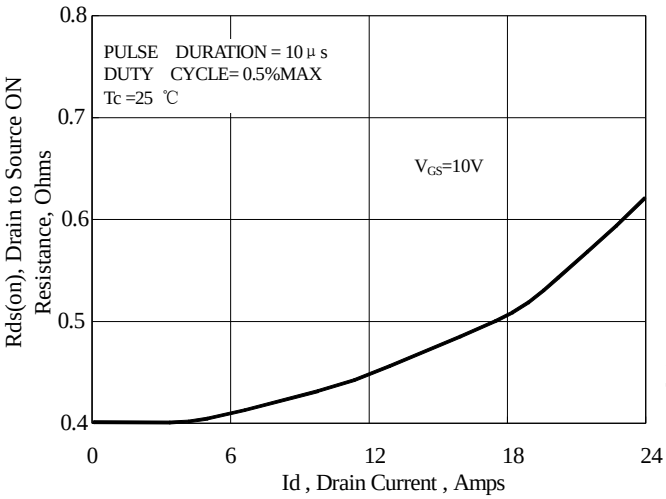

Figure 8 Typical Drain to Source ON Resistance vs Drain Current

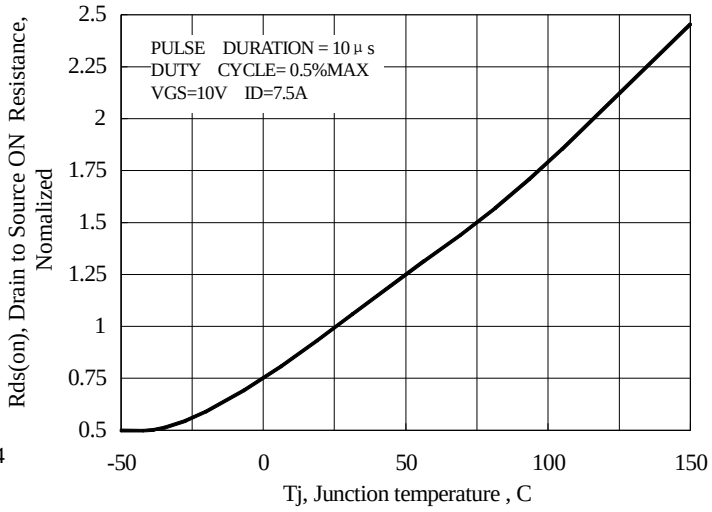

Figure 9 Typical Drian to Source on Resistance vs Junction Temperature

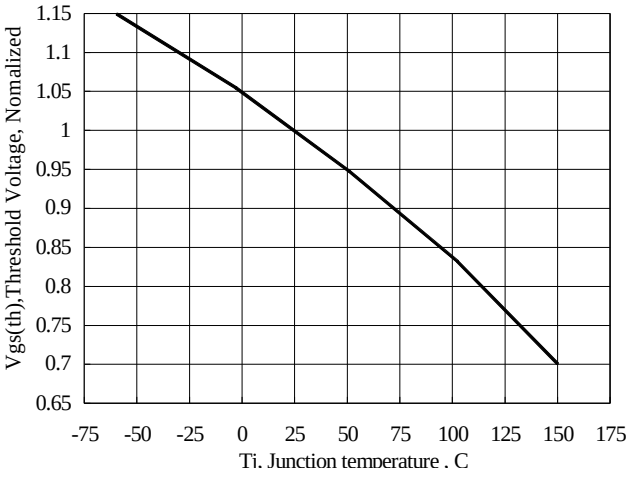

Figure 10 Typical Theshold Voltage vs Junction Temperature

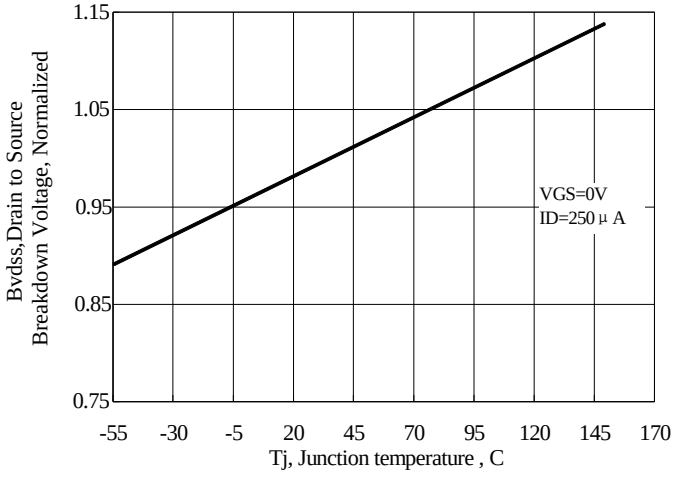

Figure 11 Typical Breakdown Voltage vs Junction Temperature

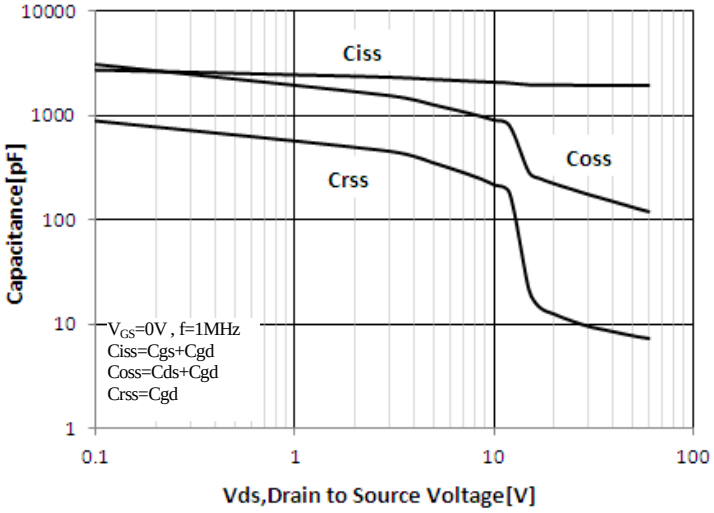

Figure 12 Typical Capacitance vs Drain to Source Voltage

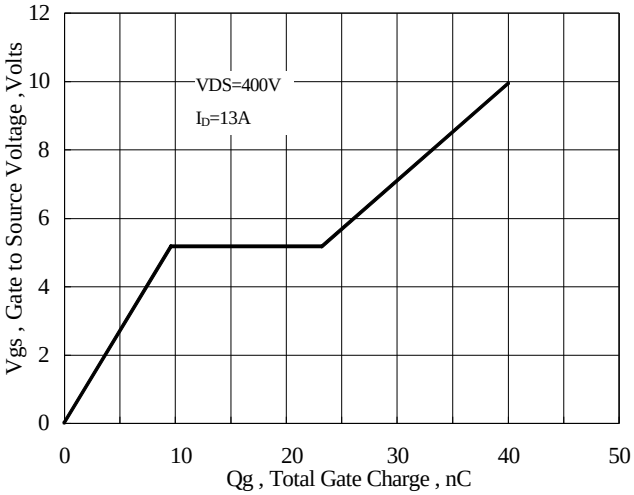

Figure 13 Typical Gate Charge vs Gate to Source Voltage

Test Circuit and Waveform

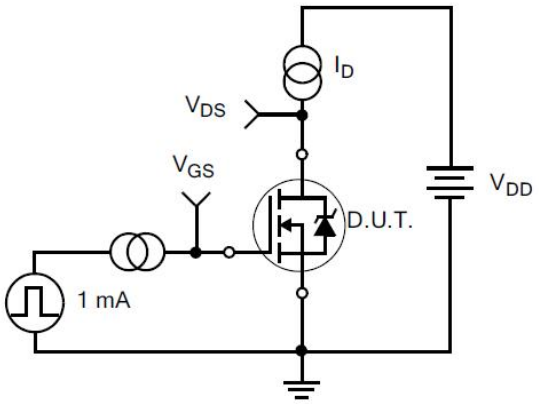

Figure 14. Gate Charge Test Circuit

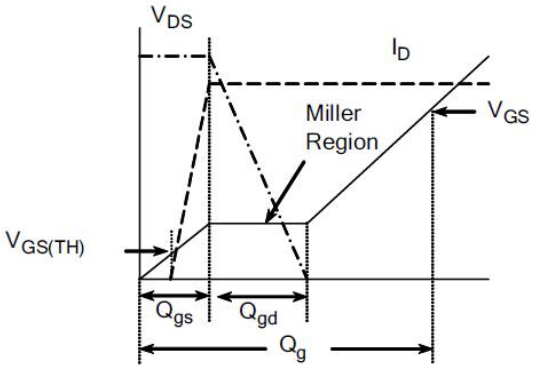

Figure 15. Gate Charge Waveforms

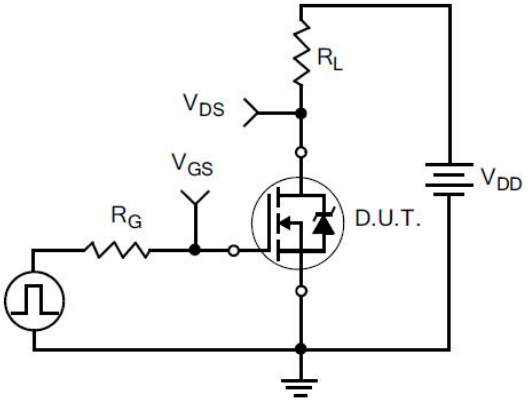

Figure 16. Resistive Switching Test Circuit

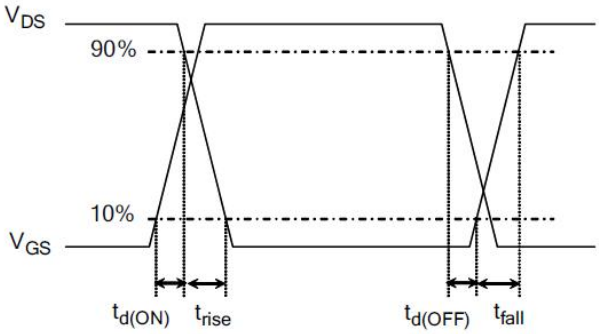

Figure 17. Resistive Switching Waveforms

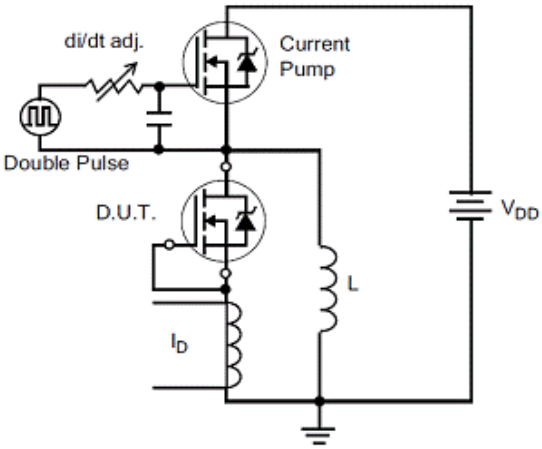

Figure 18. Diode Reverse Recovery Test Circuit

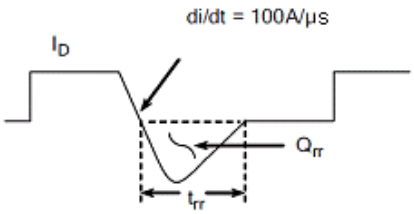

Figure 19. Diode Reverse Recovery Waveform

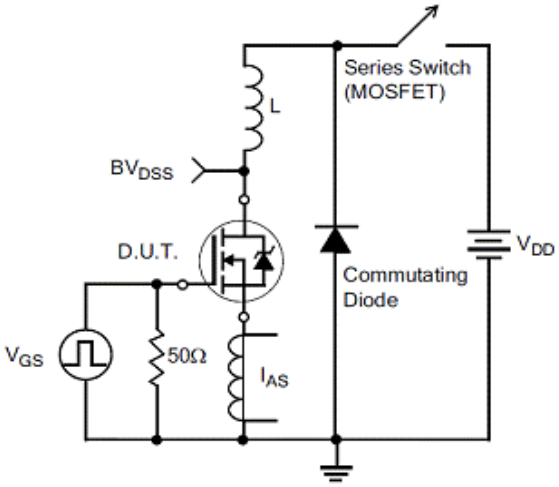

Figure20.Unclamped Inductive Switching Test Circuit

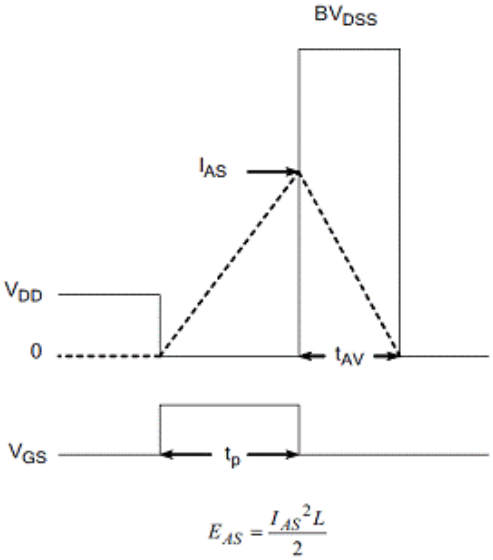

Figure21.Unclamped Inductive Switching Waveform

Package Information

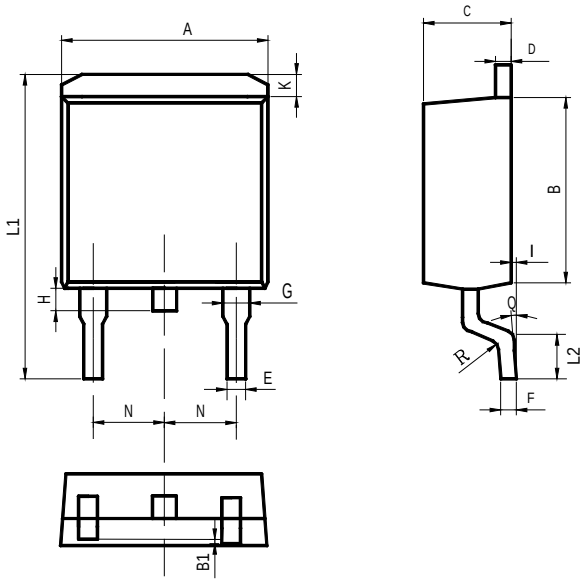

Items	Values(mm)	
	MIN	MAX
A	9.80	10.40
B	8.90	9.50
B1	0	0.10
C	4.40	4.80
D	1.16	1.37
E	0.70	0.95
F	0.30	0.60
G	1.07	1.47
H	1.30	1.80
K	0.95	1.37
L1	14.50	16.50
L2	1.60	2.30
I	0	0.2
Q	0°	8°
R	0.4	
N	2.39	2.69

TO-263Package

The name and content of poisonous and harmful material in products

Part's Name	Hazardous Substance									
	Pb	Hg	Cd	Cr(VI)	PBB	PBDE	DIBP	DEHP	DBP	BBP
Limit	≤ 0.1%	≤ 0.1%	≤ 0.01%	≤0.1%	≤0.1%	≤0.1%	≤0.1%	≤0.1%	≤0.1%	≤0.1%
Lead Frame	○	○	○	○	○	○	○	○	○	○
Molding	○	○	○	○	○	○	○	○	○	○
Chip	○	○	○	○	○	○	○	○	○	○
Wire Bonding	○	○	○	○	○	○	○	○	○	○
Solder	×	○	○	○	○	○	○	○	○	○
Note	○: Means the hazardous material is under the criterion of 2011/65/EU. ×: Means the hazardous material exceeds the criterion of 2011/65/EU. The plumbum element of solder exist in products presently, but within the allowed range of Eurogroup's RoHS.									

Warnings

1. Exceeding the maximum ratings of the device in performance may cause damage to the device, even the permanent failure, which may affect the dependability of the machine. It is suggested to be used under 80 percent of the maximum ratings of the device.
2. When installing the heatsink, please pay attention to the torsional moment and the smoothness of the heatsink.
3. VDMOSFETs is the device which is sensitive to the static electricity, it is necessary to protect the device from being damaged by the static electricity when using it.
4. This publication is made by Huajing Microelectronics and subject to regular change without notice.

WUXI CHINA RESOURCES HUAJING MICROELECTRONICS CO., LTD.

Add: No.14 Liangxi RD. Wuxi, Jiangsu, China Mail:214061 http://www. crhj.com.cn
Tel: +86 0510-85807228 Fax: +86- 0510-85800864

Marketing Part: Post: 214061 Tel: +86 0510-81805277/81805336
Fax: +86 0510-85800360/85803016

Application and Service: Post: 214061 Tel / Fax: +86- 0510-81805243/81805110