华润微电子(重庆)有限公司

CRTK140P03LZ

Trench P-MOSFET -30V, 10mΩ, -35A

Features

- Uses CRM(CQ) advanced Trench technology
- Extremely low on-resistance $R_{DS(on)}$
- Excellent $Q_g x R_{DS(on)}$ product(FOM)
- Qualified according to JEDEC criteria

Applications

- Motor control and drive
- Battery management
- UPS (Uninterrupible Power Supplies)

Product Summary

V_{DS}	-30V
$R_{DS(on)\ typ.}$	10mΩ
I_D	-35A

100% Avalanche Tested

RoHS

H F

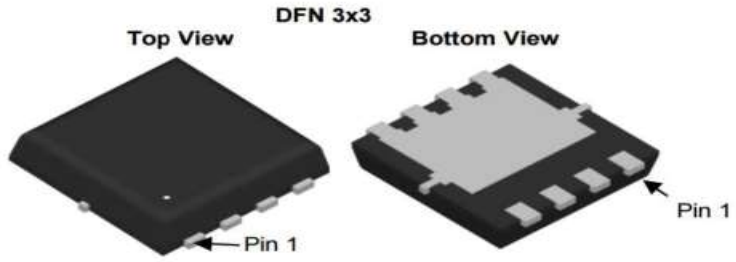

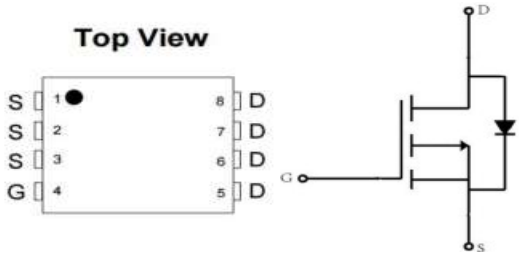

Package Marking and Ordering Information

Part #	Marking	Package	Packing	Reel Size	Tape Width	Qty
CRTK140P03LZ	140P03	DFN3.3*3.3	Reel	N/A	N/A	4000 or 5000

Absolute Maximum Ratings

Parameter	**Symbol**	**Value**	**Unit**
Drain-source voltage	V_{DS}	-30	V
Continuous drain current T_C = 25°C (Silicon limit) T_C = 25°C (Package limit) T_C = 100°C (Silicon limit)	I_D	 -64 -35 -41	A
Pulsed drain current (T_C = 25°C, t_p limited by T_{jmax})	$I_{D\ pulse}$	-60	A
Avalanche energy, single pulse (L=0.3mH, Rg=25Ω)	E_{AS}	45.5	mJ
Gate-Source voltage	V_{GS}	±20	V
Power dissipation (T_C = 25°C)	P_{tot}	78.2	W
Operating junction and storage temperature	T_j , T_{stg}	-55...+150	°C
Soldering temperature, wave soldering only allowed at leads (1.6mm from case for 10s)	T_{sold}	260	°C

©China Resources Microelectronics (Chongqing) Limited

Thermal Resistance

Parameter	Symbol	Max	Unit
Thermal resistance, junction – case.	R_{thJc}	1.6	°C/W
Thermal resistance, junction – ambient(min. footprint)	R_{thJA}	81	

Electrical Characteristic (at Tj = 25 °C, unless otherwise specified)

Parameter	Symbol	Value			Unit	Test Condition
		min.	typ.	max.		
Static Characteristic						
Drain-source breakdown voltage	BV_{DSS}	-30	-	-	V	V_{GS}=0V, I_D=-250uA
Gate threshold voltage	$V_{GS(th)}$	-1	-1.5	-2.5	V	V_{DS}=V_{GS},I_D=-250uA
Zero gate voltage drain current	I_{DSS}	-	-0.05	-1	μA	V_{DS}=-30V,V_{GS}=0V T_j=25°C
		-	-10	-20		T_j=150°C
Gate-source leakage current	I_{GSS}	-	-10	-100	nA	VGS=±20V,VDS=0V
Drain-source on-state resistance	$R_{DS(on)}$	-	10	14	mΩ	V_{GS}=-10V, I_D=-14A, Tj=25°C
			14	19		Tj=150°C
		-	15	26		V_{GS}=-4.5V, I_D=-10A,
Transconductance	g_{fs}	-	44	-	S	V_{DS}=5V,I_D=-14A
Dynamic Characteristic						
Input Capacitance	C_{iss}	1367	2050	4100	pF	V_{GS}=0V, V_{DS}=-15V, f=1MHz
Output Capacitance	C_{oss}	227	340	680		
Reverse Transfer Capacitance	C_{rss}	177	225	450		
Gate Total Charge	Q_G	25	37	75	nC	V_{GS}=-10V, V_{DS}=-15V, I_D=-22A, f=1MHz
Gate-Source charge	Q_{gs}	6	9	16		
Gate-Drain charge	Q_{gd}	5	7	15		
Turn-on delay time	$t_{d(on)}$	7	10	20	ns	V_{GS}=-10V, V_{DD}=-15V, R_{G_ext}=2.7Ω,ID=-22A
Rise time	t_r	47	71	142		
Turn-off delay time	$t_{d(off)}$	23	34	68		
Fall time	t_f	52	78	156		
Gate resistance	R_G	3	9	20	Ω	V_{GS}=0V, V_{DS}=0V, f=1MHz

©China Resources Microelectronics (Chongqing) Limited

Body Diode Characteristic

Parameter	Symbol	Value			Unit	Test Condition
		min.	typ.	max.		
Body Diode Forward Voltage	V_{SD}	-0.4	-0.84	-1.3	V	V_{GS}=0V,I_{SD}=-14A
Body Diode Continuous Forward Current	I_S			-35	A	T_C = 25°C
Body Diode Reverse Recovery Time	t_{rr}	7.3	14.5	29	ns	I_F=-22A, dI/dt=100A/μs
Body Diode Reverse Recovery Charge	Q_{rr}	2.1	3.2	6.4	nC	

*The value of R_{thJA} is measured by placing the device in a still air box which is one cubic foot.

©China Resources Microelectronics (Chongqing) Limited

Typical Performance Characteristics

Fig 1: Output Characteristics

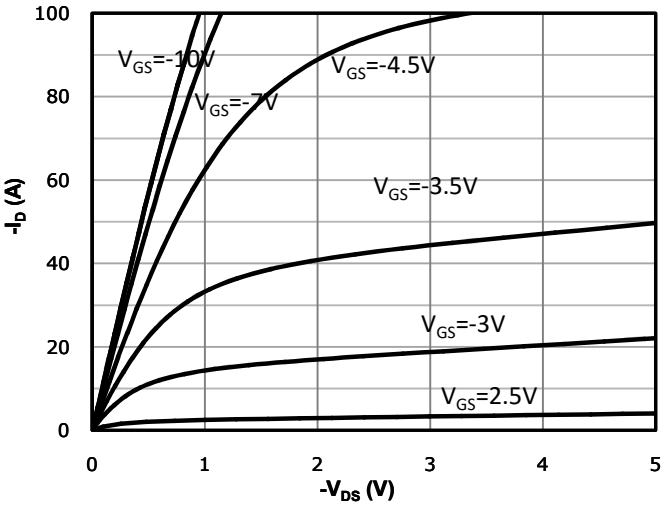

Fig 2: Transfer Characteristics

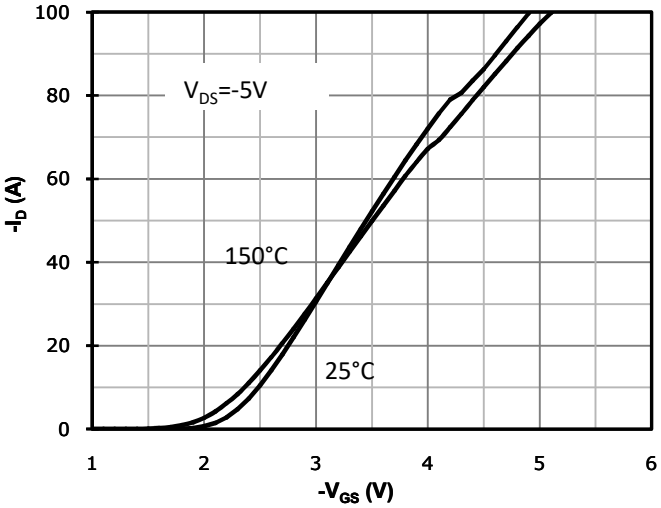

Fig 3: Rds(on) vs Drain Current and Gate Voltage

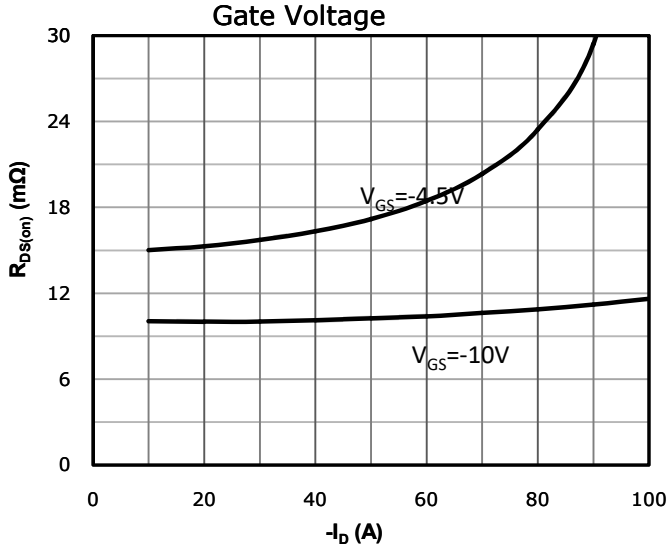

Fig 4: Rds(on) vs Gate Voltage

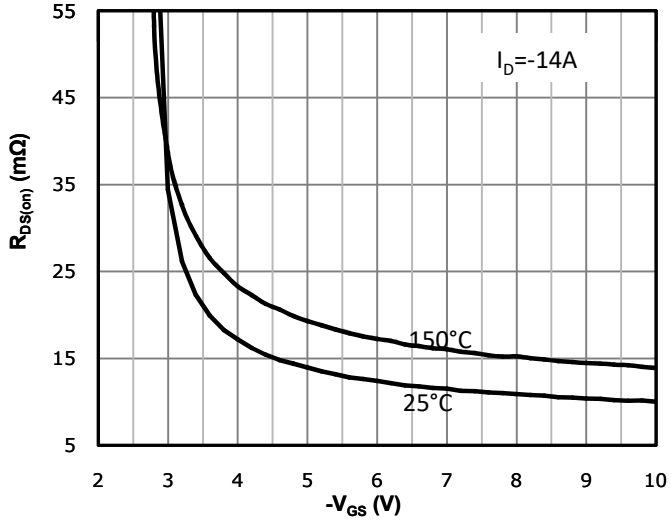

Fig 5: Rds(on) vs. Temperature

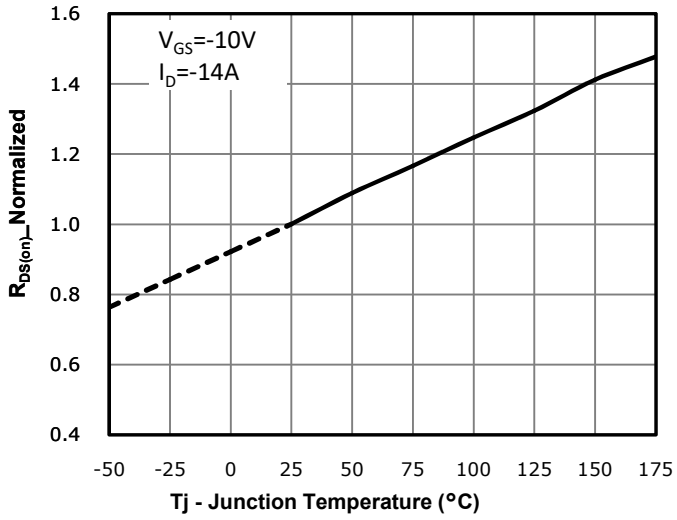

Fig 6: Capacitance Characteristics

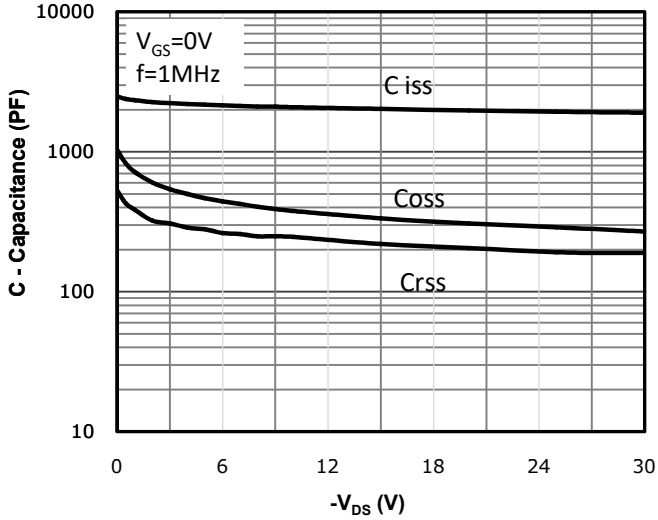

©China Resources Microelectronics (Chongqing) Limited

Fig 7: Gate Charge Characteristics

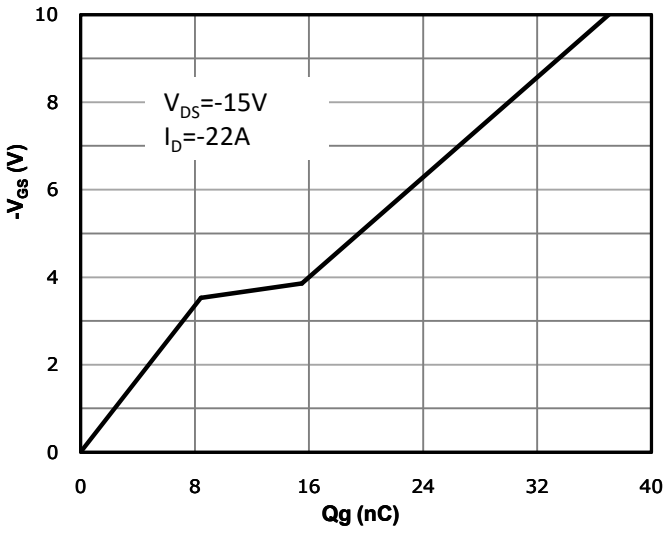

Fig 8: Body-diode Forward Characteristics

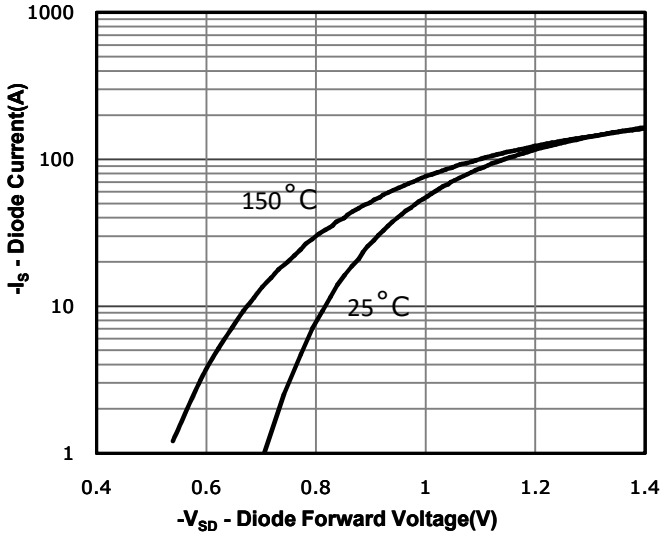

Fig 9: Power Dissipation

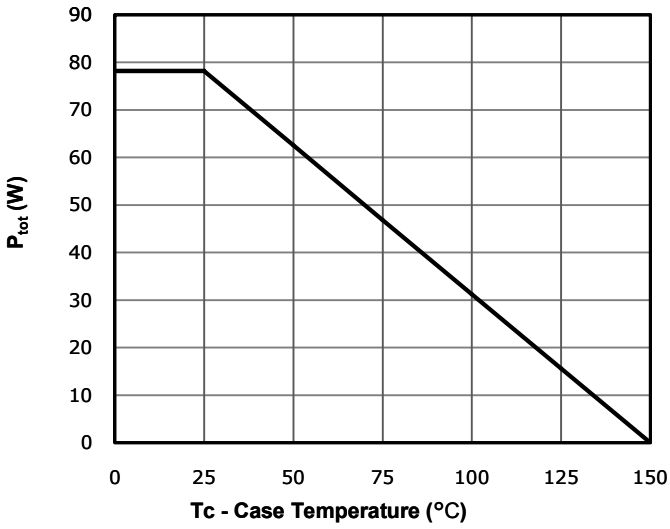

Fig 10: Drain Current Derating

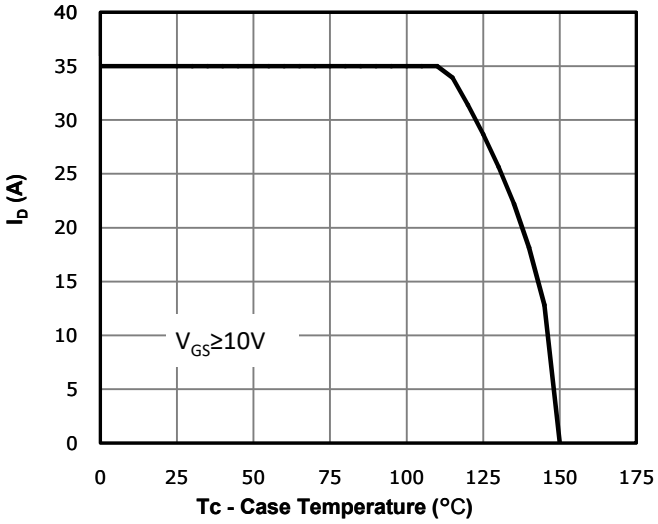

Fig 11: Safe Operating Area

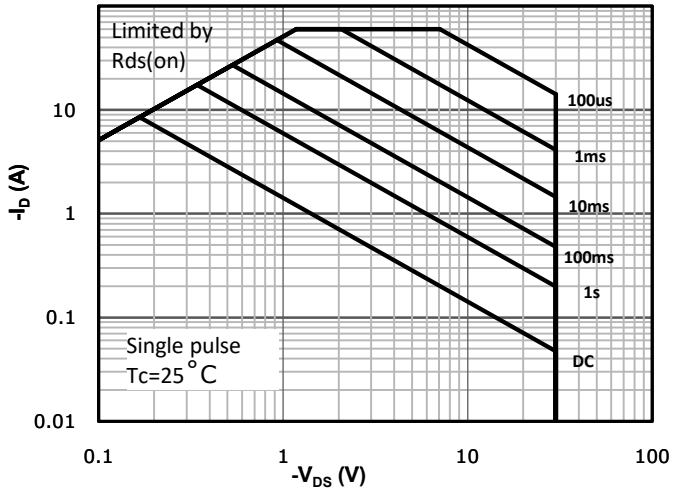

©China Resources Microelectronics (Chongqing) Limited

Fig 12: Max. Transient Thermal Impedance

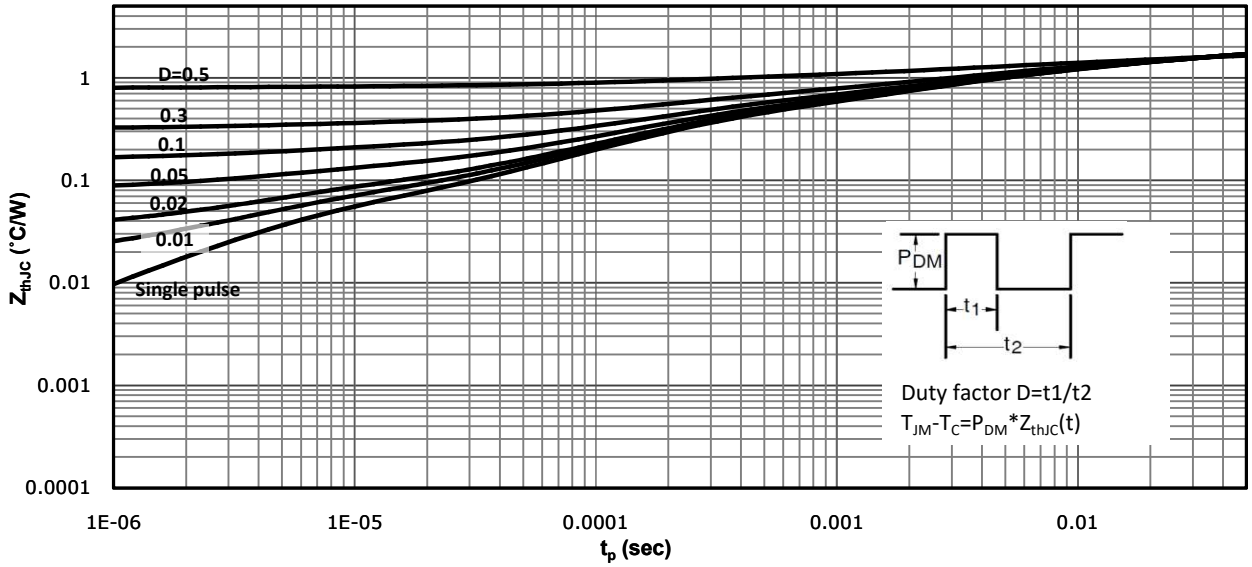

©China Resources Microelectronics (Chongqing) Limited

Test Circuit & Waveform

Gate Charge Test Circuit & Waveform

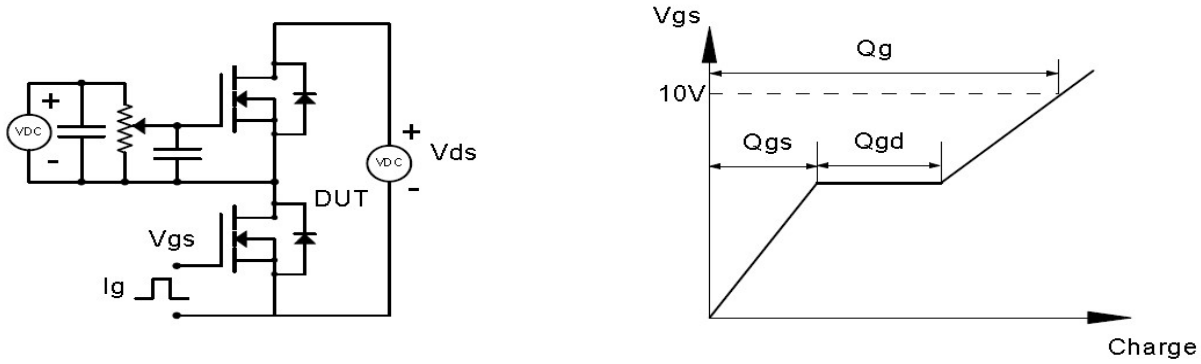

Resistive Switching Test Circuit & Waveforms

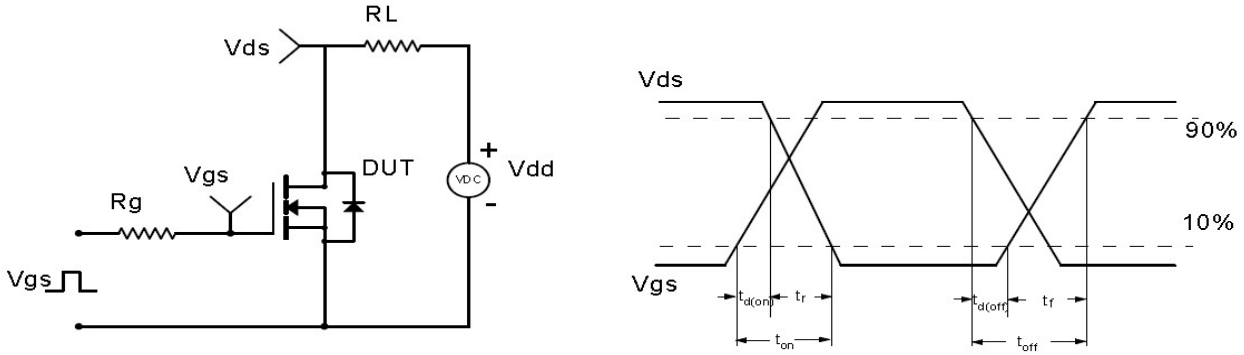

Unclamped Inductive Switching (UIS) Test Circuit & Waveforms

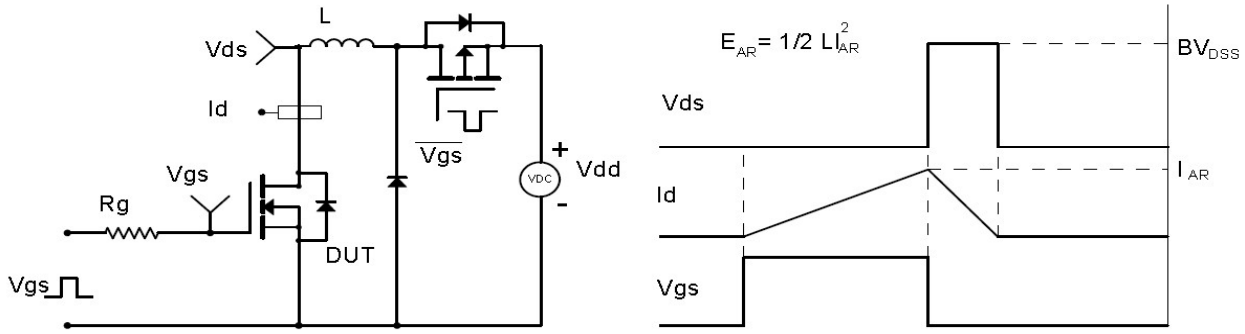

Diode Recovery Test Circuit & Waveforms

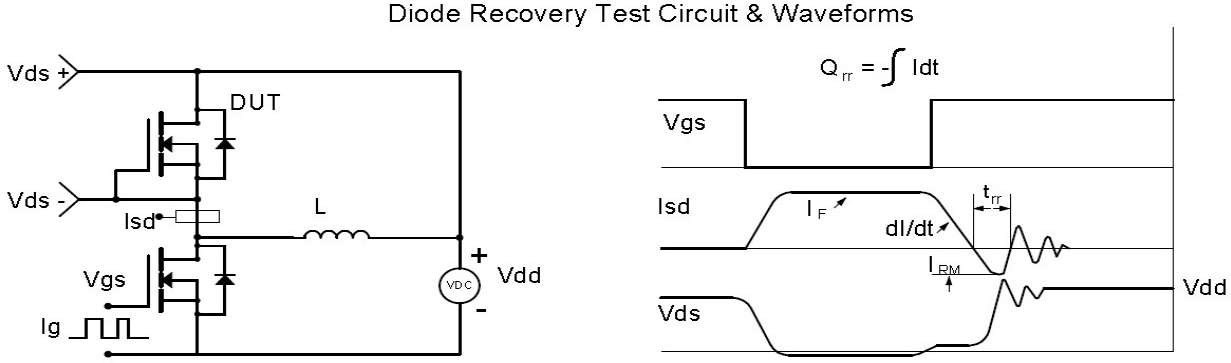

©China Resources Microelectronics (Chongqing) Limited

Package Outline: DFN3*3

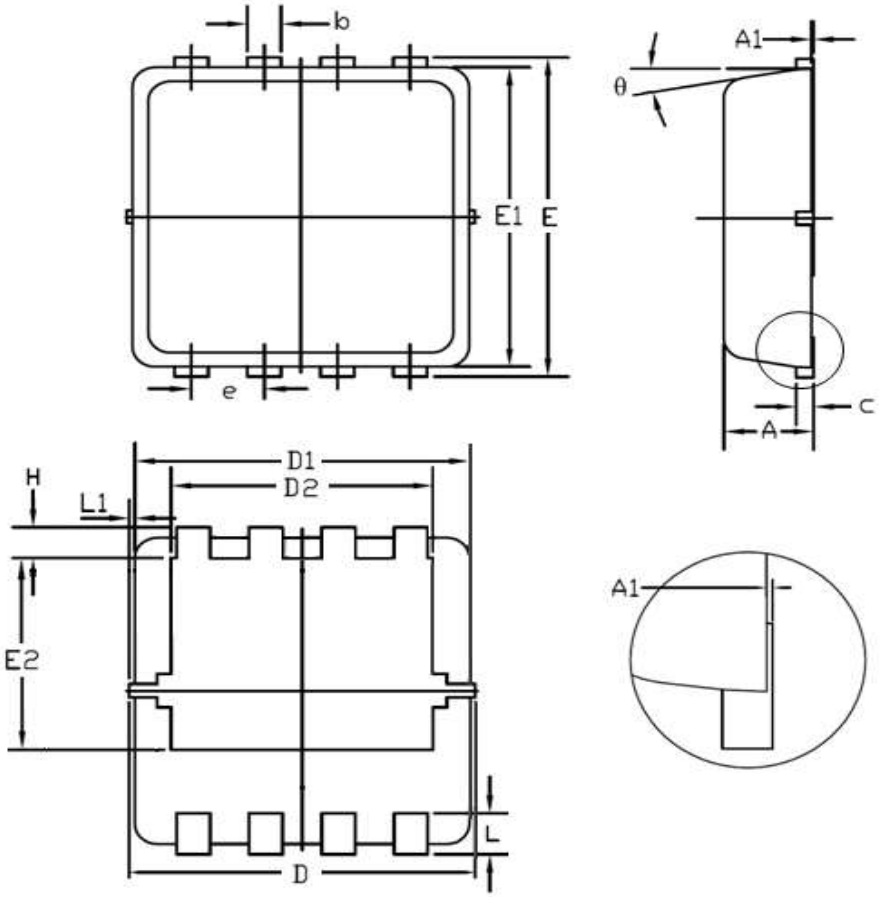

Symbol	Dimensions In Millimeters		Dimensions In Inches	
	Min.	Max.	Min.	Max.
A	0.70	0.90	0.028	0.035
A1	0.00	0.05	0.000	0.002
b	0.20	0.43	0.008	0.017
c	0.10	0.25	0.004	0.010
D	3.00	3.45	0.118	0.136
D1	2.90	3.30	0.114	0.130
D2	1.98	2.65	0.078	0.104
E	3.10	3.45	0.122	0.136
E1	2.80	3.20	0.110	0.126
E2	1.32	1.98	0.052	0.078
e	0.65 BSC		0.026 BSC	
H	0.28	0.65	0.011	0.026
L	0.30	0.65	0.012	0.026
L1	0.13		0.005	
θ	0°	14°	0°	14°

©China Resources Microelectronics (Chongqing) Limited

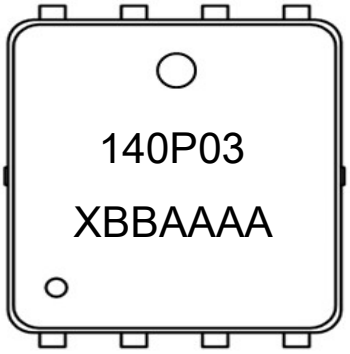

NOTE:
XBBAAA

X	—Assembly location code
BB	—Fab code
AAAA	—Lot code

©China Resources Microelectronics (Chongqing) Limited

Revision History

Revision	Date	Major changes
1.0	2022/8/31	Release of formal version.

Disclaimer

Unless otherwise specified in the datasheet, the product is designed and qulified as a standard commercial
Any and all semicondutor products have certain probability to fail or malfunction, which may result in personal
CRM(CQ) reserves the right to improve product design, function and reliability without notice.

©China Resources Microelectronics (Chongqing) Limited